REVISIONS					
REV	ZONE	DESCRIPTION	DATE	BY	ECO

SPECIFICATIONS:

FREQUENCY RANGE:	DC TO 2.4 GHz
IMPEDANCE:	50 OHMS
VSWR:	1.25:1 MAX DC – 1.0 GHz 1.35:1 MAX 1.0 TO 2.4 GHz
INPUT POWER:	1000 WATTS (AVE) 2000 WATTS (PEAK)
ATTEN. ACCURACY:	± 0.50dB OR 3% (GREATER OF) DC TO 1.0 GHz ± 0.75dB OR 5% (GREATER OF) 1.0 TO 2.4 GHz
AVAILABLE ATTENUATION:	10dB TO 60dB
OPERATING TEMPERATURE:	–55°C TO +125°C
CONNECTORS:	7/16 DIN M/F
COOLING:	159 C.F.M. FORCED AIR FAN COOLED 110 VAC 60Hz OR 220 VAC 50Hz

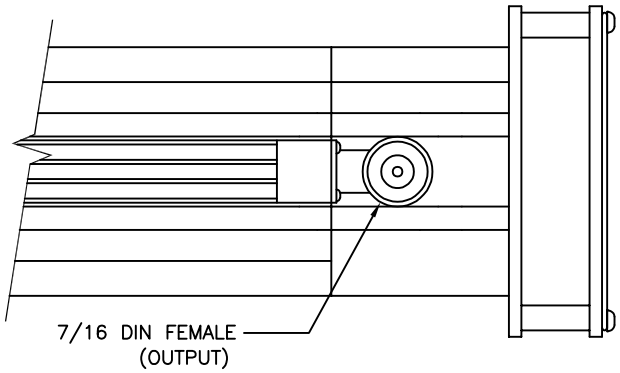

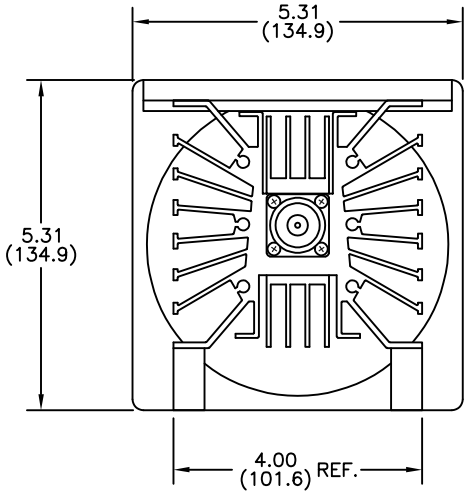

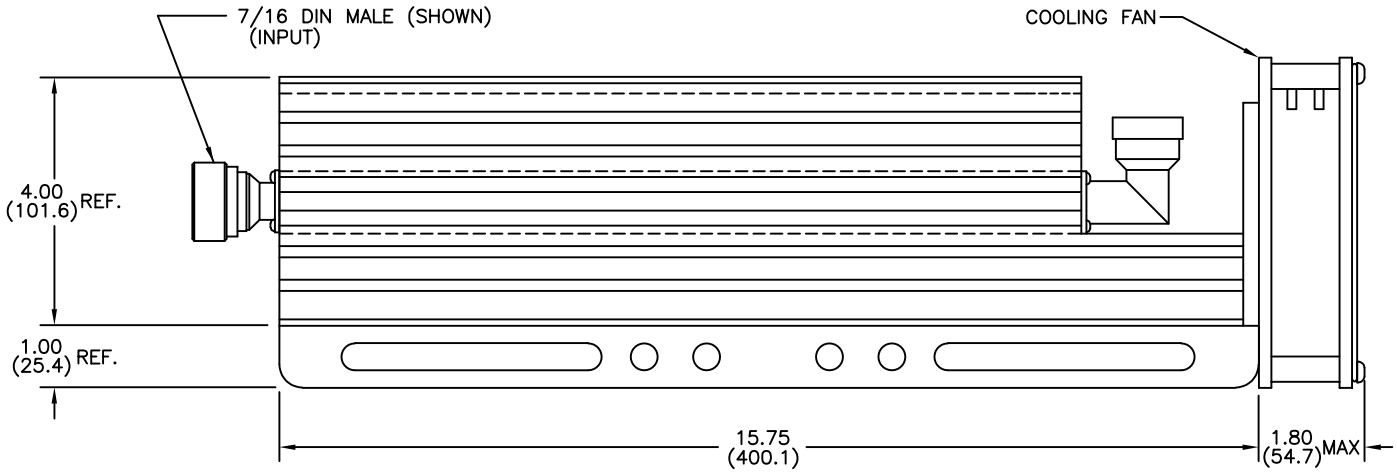

DIMENSIONS: INCHES (MILLIMETERS)

TOLERANCES	
DEC.XX ± .10	FRAC ± 1/64
.XXX ± .050	ANG ± 1/2°
MATERIAL	
FINISH	BLACK ANODIZE

THE INFORMATION CONTAINED IN THIS DOCUMENT IS THE PROPERTY OF MICROWAVE DEVICES, INC. AND IS PROPRIETARY. IT IS NOT TO BE COPIED OR USED FOR ANY PURPOSE OTHER THAN AS INSTRUCTED, IN WRITING, BY MICROWAVE DEVICES, INC.

SIGNATURES		DATE
DR	R. HARMON	11/3/11
CHK		
APPD		
APPD		

CONTACT: MICROWAVE DEVICES – 240 N. FORSYTHE ST. FRANKLIN, IN 46131
(317) 868-8833

DIMENSIONS ARE IN INCHES UNLESS OTHERWISE SPECIFIED.

MICROWAVE DEVICES
RF and Microwave Components

OUTLINE MA-51000/XD7 ATTENUATOR
1000 WATTS, DC – 2.4GHz, 7/16 M/F

CAGE	SIZE	DRAWING NO.
60674	D	902204

DRAWING SCALE 1:1 SHEET 1 OF 1